MAYTONİ

49 (0) 2533 64 295200

Track luminaire Alfa S Magnetic track system 23mm EXILITY 3000K 6W 50°

Series: Alfa S **Article:** TR132-2-7W3K-B



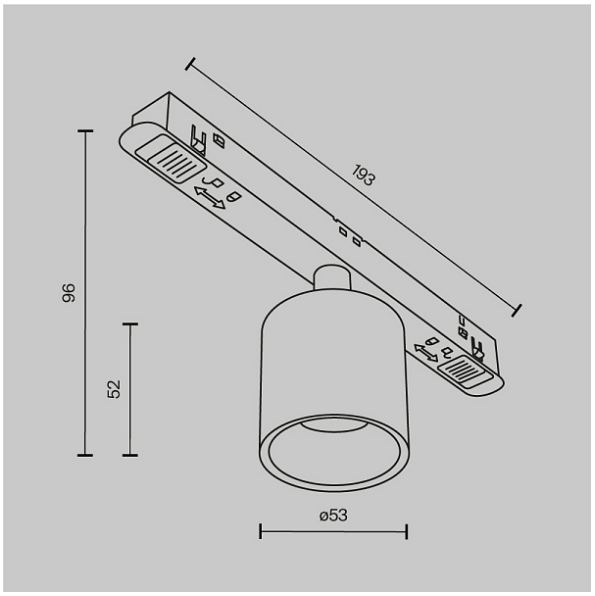

Article	TR132-2-7W3K-B
Brand	Technical
Collection	Magnetic track system 23mm EXILITY
Series	Alfa S
Product type	Track luminaire
Fitting color	Black
Fitting material	Aluminum
Color temperature	3000 K
IP protection	IP 20
Dimmable	No
Height	96 mm
Width	53 mm
Color rendering index	90 CRI
Length	193 mm
Beam angle	50 °
Voltage	DC 48 V
Diameter	53 mm
Protection class	Class3
Warranty	5 years
Power	6 W
Volume	0.0014 m³
Light flux	450 Lm

Energy efficiency class	G
Fireproof	No
Packing length	205 mm
Net	0.16 kg
Gross	0.21 kg
Service life	50000 h
Number of LEDs	1