MAYTONİ

49 (0) 2533 64 295200

Track luminaire Relax Magnetic track system 23mm EXILITY 3000K 5W 120°

Series: Relax **Article:** TR107-2-5W3K-B



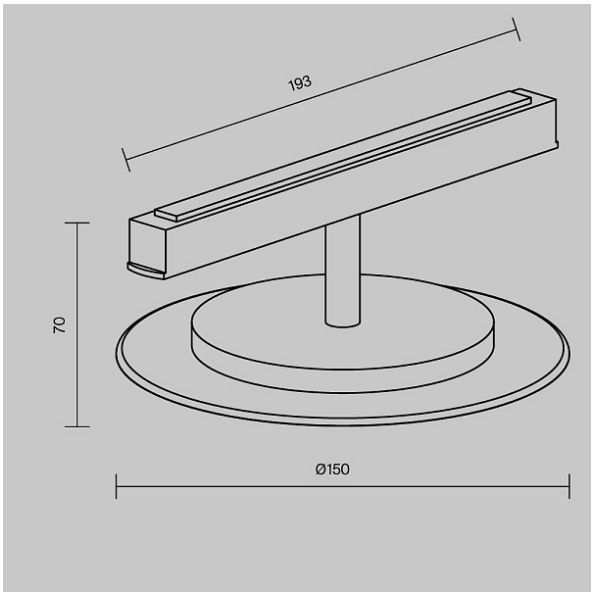

Article	TR107-2-5W3K-B
Brand	Technical
Collection	Magnetic track system 23mm EXILITY
Series	Relax
Product type	Track luminaire
Fitting color	Black
Fitting material	Aluminum
Color temperature	3000 K
IP protection	IP 20
Dimmable	No
Height	70 mm
Width	150 mm
Color rendering index	90 CRI
Length	193 mm
Beam angle	120 °
Voltage	DC 48 V
Diameter	150 mm
Protection class	Class3
Warranty	5 years
Power	5 W
Volume	0.002 m³
Light flux	164 Lm

Energy efficiency class	G
Fireproof	No
Packing length	160 mm
Net	0.43 kg
Gross	0.45 kg
Service life	50000 h
Number of LEDs	80